Diritti riservati All rights reserved

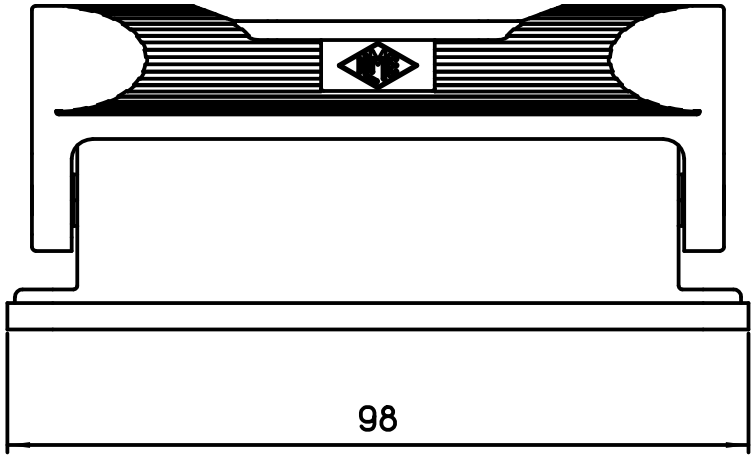

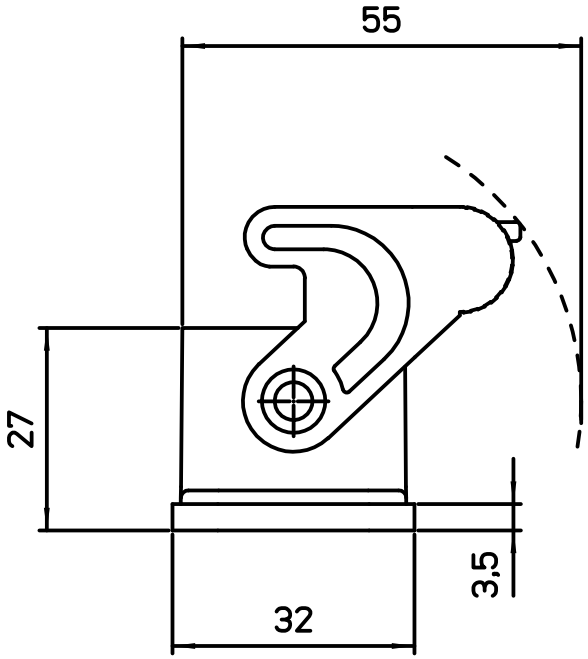

dimensions in mm	JPI 25 L	Scale
Date 08/10/14	Bulkhead housing 1 lev. - JEI	1:1
Sign. M.Pezzimenti		